Laser Diodes

Laser Diodes

Visible Laser Diodes

Page 197

PL 450B

PL TB450

PL 515

Pulsed laser diodes

Page 197

SPL PLxx

SPL LLxx

CW laser diodes (single emitter)

Page 197

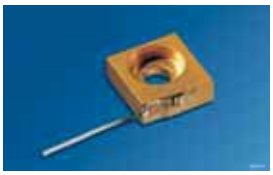
SPL CGxx

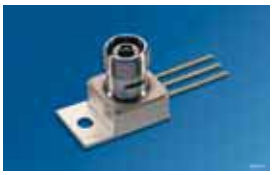
SPL 2Fxx

SPL TD85-C

Unmounted laser bars

Page 198

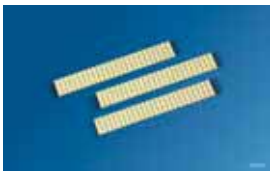
SPL BGxx / SPL BKxx

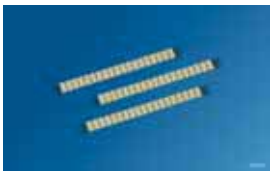
SPL BXxx

SPL BSxx

Pulsed laser dies

Page 198

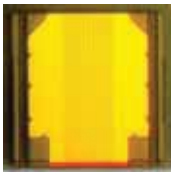
SPL DLxx

Safety Advice

Depending on the mode of operation, these devices emit highly concentrated non visible infrared light which can be hazardous to the human eye. Products which incorporate these devices have to follow the safety precautions given in IEC 60825-1 “Safety of laser products“.

Informationen zur Augensicherheit

Je nach Betriebsart emittieren diese Bauteile hochkonzentrierte, nicht sichtbare Infrarot-Strahlung, die gefährlich für das menschliche Auge sein kann. Produkte, die diese Bauteile enthalten, müssen gemäß den Sicherheitsrichtlinien der IEC-Norm 60825-1 behandelt werden.

Type Designation

Bezeichnungsschema

SPL	Type	Package	Subtype	Chip Type/Opt. Output	Wavelength	nm (Center)
	P	**P**lastic package	L	Pulsed laser	81	808
	L	**L**ead frame based package	G	25 emitters, 200/400 µm, 50% Fill factor	85	850
	C	**C**-mount carrier	K	25 emitters, 200/400 µm, 50% Fill factor	90	905
	2	sealed housing (TO- **2**20)	X	19 emitters, 150/500 µm, 30% Fill factor	91	915
	B	**B**ar, unmounted	S	75 emitters, 82% Fill factor	94	940
	D	**D**ie, chip	F	Fiber connector (**F**C)	98	975
	T	TO-56	D	Single emitter with 80µm aperture		

Note:
cw = continuous wave
qcw = quasi continuous wave
xx in the type name (e.g. SPL PLxx) refers to the wavelength

Visible Laser Diodes

Package	Type	λ_{peak} typ [nm]	Opt. power P_{opt} [W]	V_F typ [V]	Measurement cond.	Beam divergence (FWHM) $\Theta_\perp$ x $\Theta_{\parallel}$ [°]	Package Features	Ordering Code	Package Fig.
	PL 450B	450	0.08	5.8	I_F = 100 mA	21° x 7°	TO38 iCut package	Q65111A0518	1
	PL TB450	450	1.4		I_F = 100 mA	21° x 7°	TO38 iCut package	Q65111A2303	1
	PL 515	515		6.5	P_{op} = 30 mW	22° x 6°	TO38 iCut package	Q65111A3559	2

Pulsed laser diodes

Package	Type	Package Outline	λ_{peak} typ [nm]	Opt. power P_{opt} [W]	Beam divergence (FWHM) $\Theta_\perp$ x $\Theta_{\parallel}$ [°]	Package Features	Ordering Code	Package Fig.
	SPL PL85	Plastic housing	850	10	25° x 9°	5 mm radial plastic package, pulse width < 100 ns	Q62702P1759	3
	SPL PL90_0		905	4			Q62702P5270	
	SPL PL90			25			Q62702P1760	
	SPL PL90_3			75			Q62702P5353	
	SPL LL85	Plastic housing with integrated driver	850	14	30° x 15°	Integrated laser driver circuit, plastic package, pulse width < 50 ns	Q62702P3558	4
	SPL LL90_3		905	70			Q65110A1009	5

CW laser diodes (single emitter)

Package	Type	Package Outline	λ_{peak} typ [nm]	Opt. power P_{opt} [W]	Beam divergence (FWHM) $\Theta_\perp$ x $\Theta_{\parallel}$ [°]	Package Features	Ordering Code	Package Fig.
	SPL CG81-2S	Laser on submount	808	2	38° x 7°	Open heat sink (C-type)	Q65110A1832	6
	SPL CG94-2S		940				Q65110A1833	
	SPL TD85-C	TO-56	845	0.45	40° x 6°	Hermetically sealed metal package	Q65111A0232	7

CW laser diodes (single emitter)

Package	Type	Package Outline	λ_{peak} typ [nm]	Opt. power P_{opt} [W]	Fiber diameter D [µm]	Numerical aperture NA	Package Features	Ordering Code	Package Fig.
	SPL 2F81-2S	TO-220 FC (fiber coupled)	808	1.5	200	0.22	TO-220 package, FC-receptacle for efficient fiber coupling, thermistor for temperature and wavelength control	Q65110A1722	8
	SPL 2F94-2S		940					Q65110A1828	

Unmounted laser bars (other wavelengths and bar geometries on request)

Package	Type	Package Outline	λ_{peak} typ [nm]	P_{opt} typ [W]	Beam divergence full angle ($1/e^2$) $\theta_\perp$ x $\theta_{\parallel}$ [°]	Package Features	Chip size [mm x mm]	Ordering Code	Package Fig.
	SPL BK81-12S	unmounted laser bar	808	60	65° x 9°	50% filling factor, 25 emitters, emitter width 200 µm, emitter pitch 400 µm	10 x 1.2	Q65110A8104	
	SPL BK81-20H		803	100			10 x 2	Q65110A8725	
	SPL BK91-20HT		915	120				Q65110A8594	
	SPL BK94-20HT		940					Q65110A8595	
	SPL BK98-20HT		980					Q65110A8596	
	SPL BX81-2S	unmounted laser bar	808	40	65° x 9°	30% filling factor, 19 emitters, emitter width 150 µm, emitter pitch 500 µm	9.5 x 1.2	Q62702P5510	
	SPL BS81-9S	unmounted laser bar	808	150	65° x 9°	82.5% filling factor, 75 emitters, emitter width 110 µm, emitter pitch 130 µm for qcw applications	10 x 0.9	Q65110A2676	

Pulsed laser dies

Package	Type	Package Outline	λ_{peak} typ [nm]	Opt. power P_{opt} [W]	Beam divergence (FWHM) $\theta_\perp$ x $\theta_{\parallel}$ [°]	Package Features	Chip size [mm x mm]	Ordering Code	Package Fig.
	SPL DL90_3	unmounted laser chip	905		25° x 11°	emitter width 200 µm	0.6 x 0.6	Q65110A2591	

Dimensions in mm (inch)

Figure 1: PL 450B, PL TB450

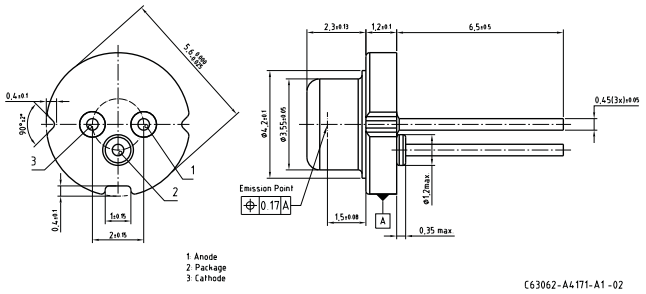

Figure 2: PL 515

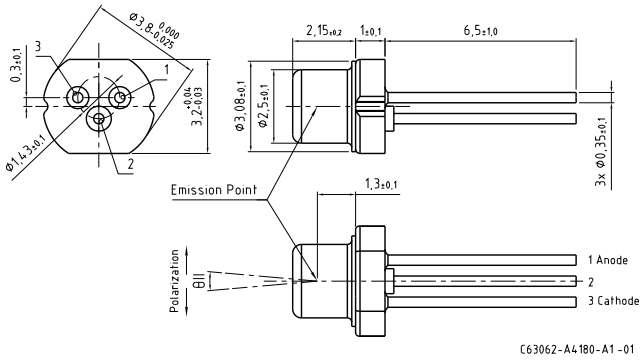

Figure 3: SPL PLxx

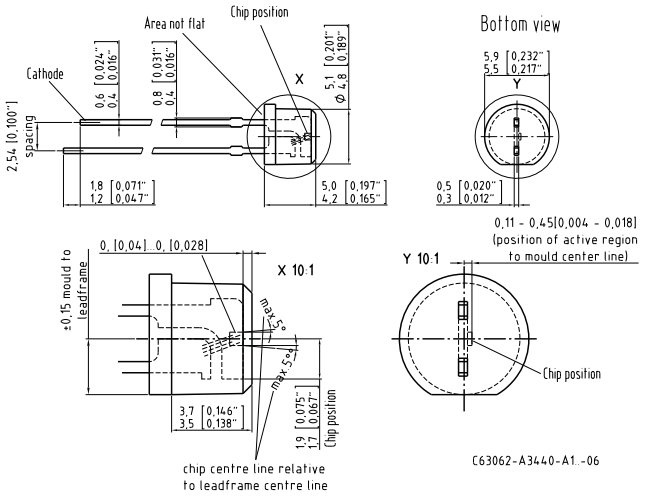

Figure 4: SPL LL85

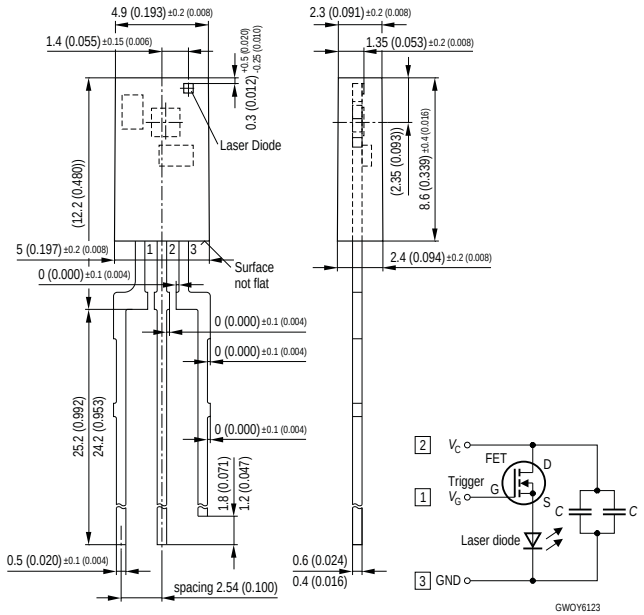

Dimensions in mm (inch)

Figure 5: SPL LL90_3

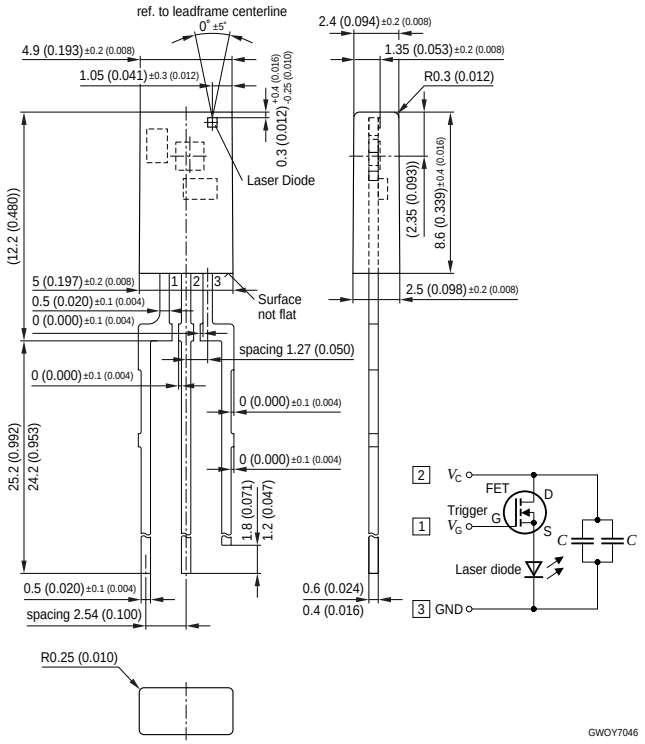

Figure 6: SPL CGxx

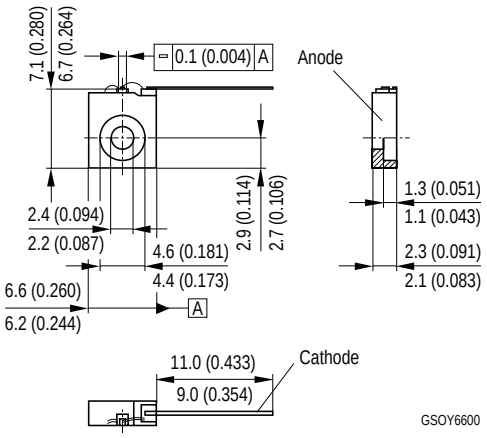

Figure 7: SPL TD85-C

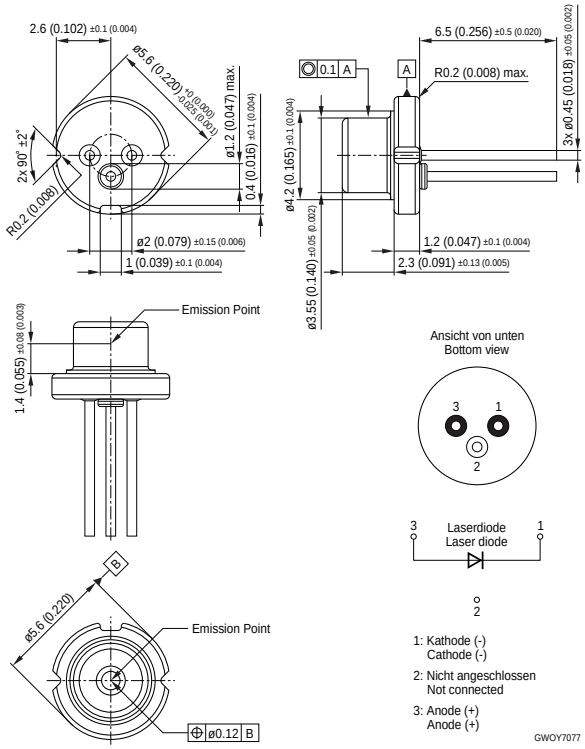
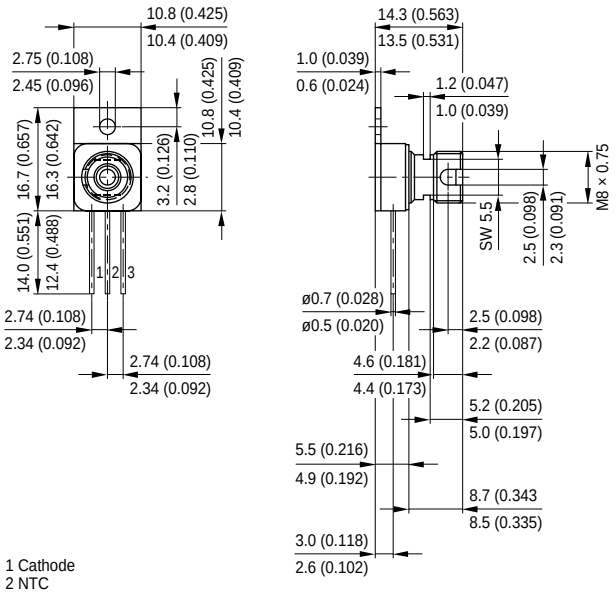
Figure 8: SPL 2Fxx