Displaying Message Systems Without a Microprocessor Appnote 13

Any Infineon / OSRAM 4 digit, alphanumeric Intelligent Display device has on board memory, decoder and drive circuitry which makes these displays particularly well suited to connect directly to a microprocessor. However, small multi-message systems of 4, 8, 12, 16 character length need not have a microprocessor to drive the Intelligent Display. With the aid of PROM, Intelligent Display devices can combine lighted indicators, status displays, annunciator messages or symbols, or a "canned message" into a single display.

Annunciator Displays

An automobile, for example, has several switches each lighting its own status or annunciator indicator. A single Intelligent Display could easily display messages alternately upon interrogation of the appropriate switches.

Figures 1, 2, and 3 show a DLX1414 but any of our Intelligent Display devices can be substituted. The circuit shown in Figure 1 will display four character messages sequentially for each open switch and continue to display until switches are returned to their normally closed positions. The Counters U4 and U5 address the PROM U6 and select switches on U1. The Data Selector (U1) sequentially selects one of eight switches (oil, temperature, catalytic, generator, brake, door, belt, and null). The eighth switch or null state can display a blank for a normal or off condition. The output of U1 enables the display's CE. When this signal goes high, the Monostable (U2) will fire and inhibit the Oscillator U3 for approximately a two second display time. The PROM, U6, generates the ASCII code data for each word. Expansion of the display can easily be achieved by adding a PROM for each additional display.

Another annunciator type display is shown in Figure 2. This display has a message of up to 16 characters and will continue to display the same line until the 6 bit input code changes state. With this scheme, it can be seen that the 16 character X64 line message PROM easily can be adapted for other message and character length combinations.

Figure 1.

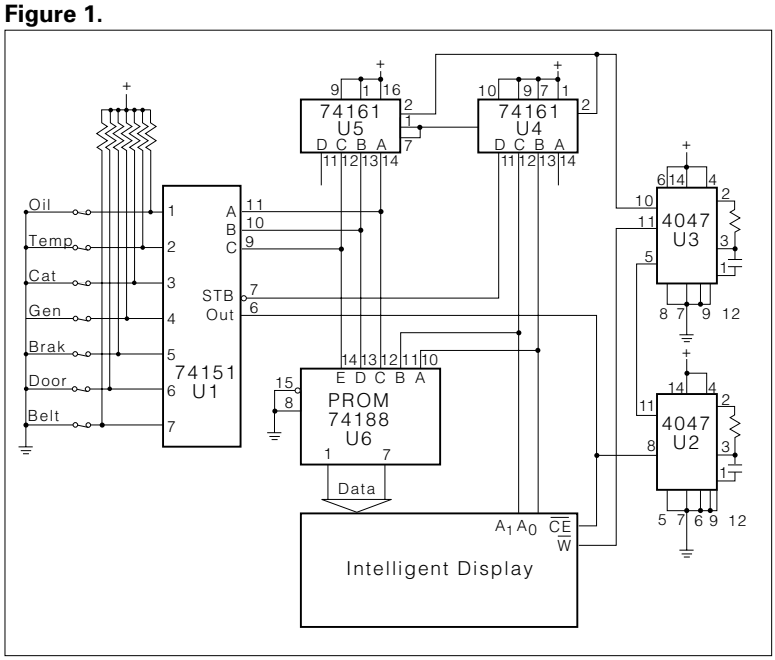

Figure 2. Typical circuit for 64 messages–16 characters long canned messages

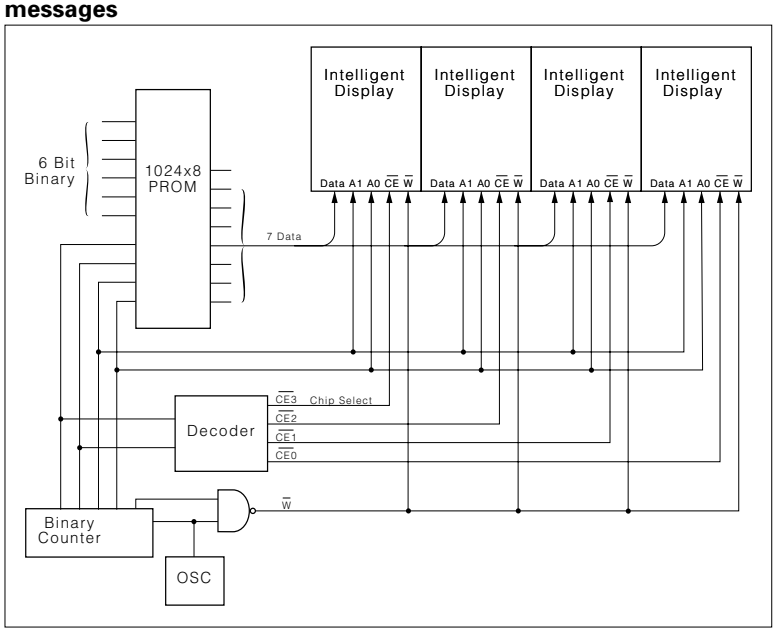

© 2000 Infineon Technologies Corp. • Optoelectronics Division • San Jose, CA

Canned Messages

The canned message type display can be an ideal sales marketing or instructional aid. The message can be altered by replacing the PROM.

The technique for this display would be to sequentially display a word or group of words, depending on the character length of the display, through the entire message. The system could either continue to repeat itself or could go through the complete sequence once each time a switch is operated.

Figure 3 is the schematic for a sales demo box for the DLX1414. A 256X8 PROM was used to display an 8 digit-32 word message. The oscillator (U1) increments the counters U2, U3, U4 providing the address for the DL1416s and PROM U9. After eight counts the monostable U10 is fired, inhibiting the oscillator for a two second display time. Devices U5 and U8 were added for cursor control. Decoder U8 will alternately enable or disable a data bit for a cursor to proceed writing new data into each digit. The multiplexer U5 will select the character data or the cursor data for the D0–D3 data lines. Inverters on the address lines cause data entry to occur from the left rather than from the right.
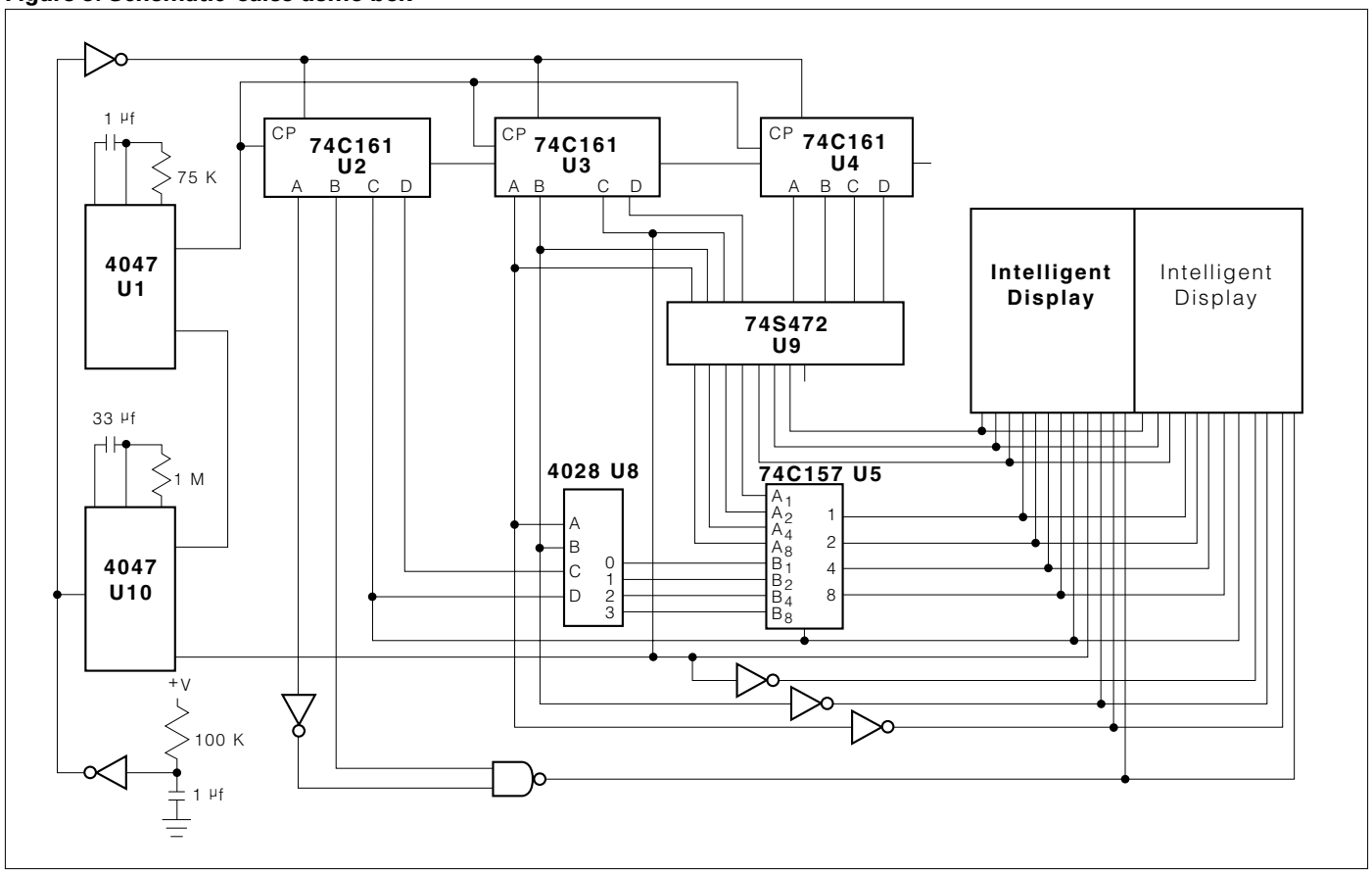
Figure 3. Schematic–sales demo box